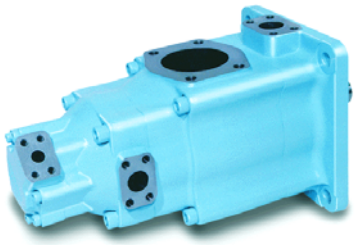

(T6EDC)

三联叶片泵

T67DBB, T67DCB, T6DCC 系列
T67DDBS, T6DDCS 系列
T67EDB(S), T6EDC(S) 系列

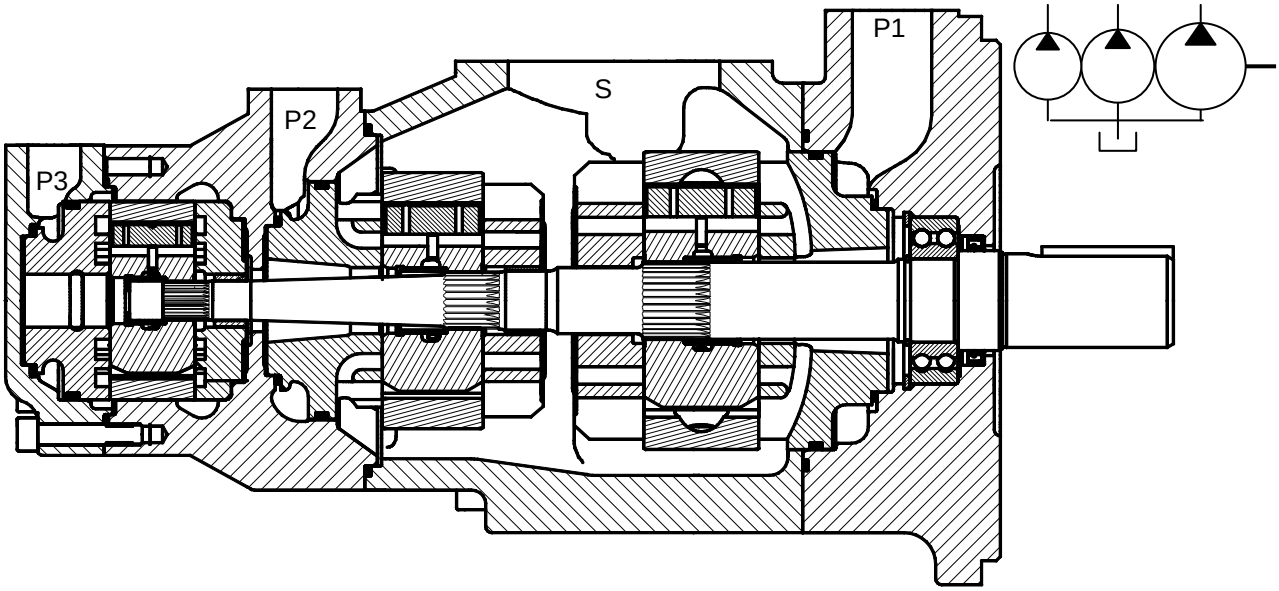

型號说明 ..... 例：**T6EDC-072-042-020-1R00-A1F0**

1. **T6EDC-072-025-020-1R00-A1F0**..... 系列号

SAE 安装型式	**T67DBB**	**T67DCB**	**T6DCC**
	T67DDBS	**T6DDCS**	
	T67EDBS	**T6EDCS**	
ISO 安装	**T67EDB**	**T6EDC**	

2. **T6EDC-072-025-020-1R00-A1F0**.....泵芯规格

B	C	D	E
B02.....5.8	**003**.....10.8	**014**.....47.6	**042**.....132.3
B03.....9.8	**005**.....17.2	**017**.....58.2	**045**.....142.4
B04.....12.8	**006**.....21.3	**020**.....66.0	**050**.....158.5
B05.....15.9	**008**.....26.4	**024**.....79.5	**052**.....164.8
B06.....19.8	**010**.....34.1	**028**.....89.7	**057**.....179.8
B07.....22.5	**012**.....37.1	**031**.....98.3	**062**.....196.7
B08.....24.9	**014**.....46.0	**035**.....111.0	**066**.....213.3
B10.....31.8	**017**.....58.3	**038**.....120.3	**072**.....227.1
B12.....41.0	**020**.....63.8	**042**.....136.0	**085**.....269.0
B15.....50.0	**022**.....70.3	**045**.....145.7	
	025.....79.3	**050**.....158.0	
	028.....88.8		
	031.....100.0		

3. **T6EDC-072-025-020-1R00-A1F0**.....軸伸形式

4. **T6EDC-072-025-020-1R00-A1F0**.....轉向

顺时针	**R**
逆时针	**L**

5. **T6EDC-072-025-020-1R00-A1F0** .....油口

6. **T6EDC-072-025-020-1R00-A1F0** ..... 设计號

7. **T6EDC-072-025-020-1R00-A1F0** ..... 密封等级

丁晴橡胶：矿物油	**1**
氟橡胶：矿物油和防火油液	**5**

8. **T6EDC-072-025-020-1R00-A1F0** ..... 连接型式

		P3 = ¾”		P3 = 1”	
		公制	UNC	公制	UNC
T67DBB T67DCB	法兰式安装	**M1**	**01**	**-**	**-**
T6DCC	法兰式安装	**M1**	**01**	**M0**	**00**
T6DDCS	法兰式安装	**M1**	**01**	**M0**	**00**
T67DDBS	法兰式安装	**M1**	**01**	**-**	**-**
T67EDB	法兰式安装 支座安装	**F1** **P1**	**-**	**-**	**-**
T6EDC	法兰式安装 支座安装	**F1** **P1**	**-**	**F0** **P0**	**-**
T6EDCS	法兰式安装 支座安装		**F1** **P1**	**-**	**F0** **P0**

油口				
	00 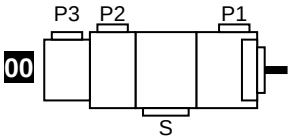	**01** 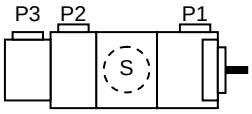	**02** 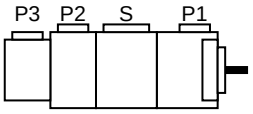	**03** 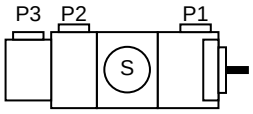

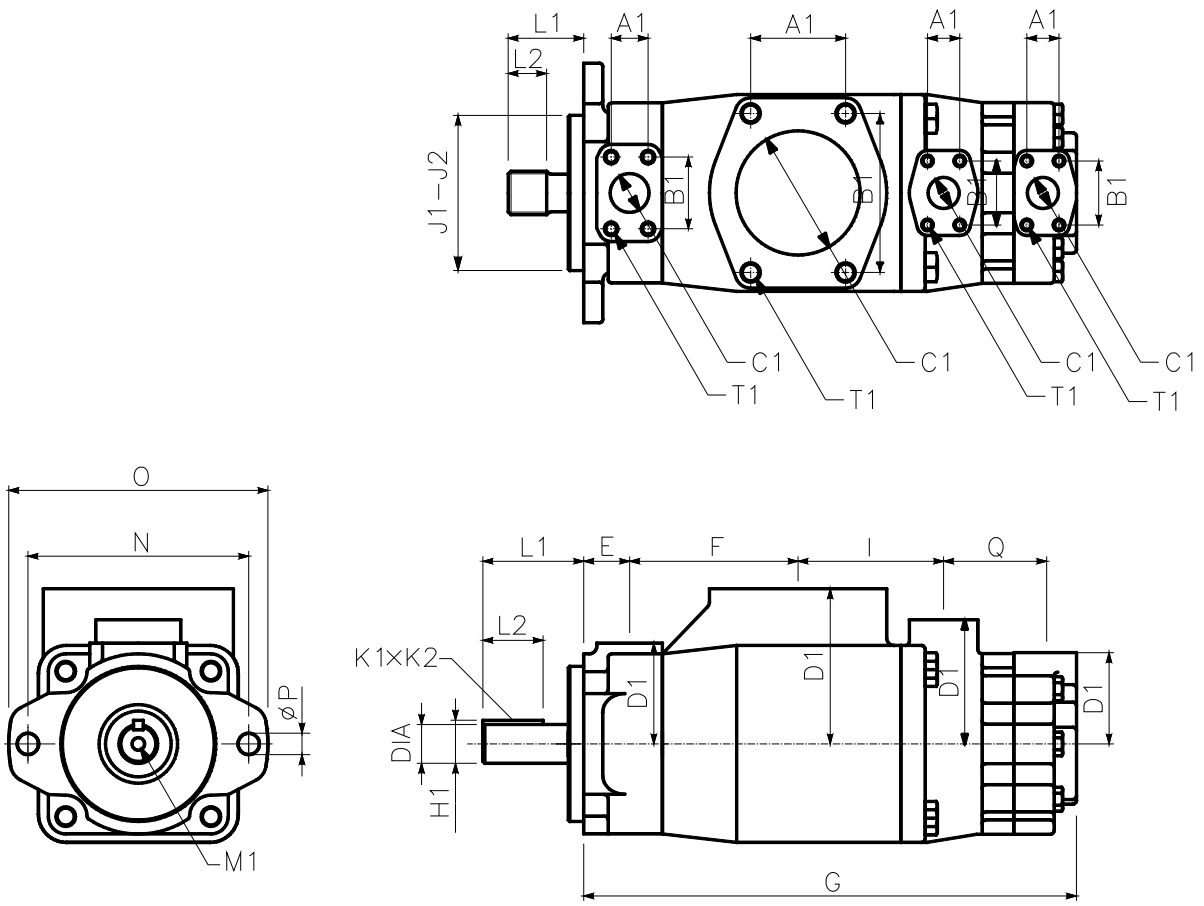

	T67DBB
E	38.1
F	138.0
G	404.0
I	119.3
J1 J2	127.00 126.95
N	181.0
O	212.4
ØP	17.5
Q	84.4
	T67DCB
E	38.1
F	138.0
G	404.0
I	119.3
J1 J2	127.00 126.95
N	181.0
O	212.4
ØP	17.5
Q	84.4
	T6DCC
E	38.1
F	138.0
G	404.0
I	119.3
J1 J2	127.00 126.95
N	181.0
O	212.4
ØP	17.5
Q	84.4

軸伸		最大扭矩 (N.m)		尺寸 (mm)					
		T67DBB T67DCB	T6DCC	L1	L2	直径	K1 x K2	H1	M1
1	平键 : No SAE (∅31)	721	721	83.6	49.3	31.750 – 31.700	6.35 x 6.30	34.6	
2	平键 : SAE CC (∅38)	1108	1108	89.7	50.8	38.100 – 38.075	9.52 x 9.47	42.4	
3	花键 : SAE C	●	●	55.2	38.0	Class 1-J498b, 12/24 d.p. - 14 牙			
4	花键 : SAE CC	●	●	61.0	31.5	Class 1-J498b, 12/24 d.p. - 17 牙			
6	花键 : No SAE		●	76.0	48.0	Class 1-J498b, 12/24 d.p. - 14 牙			

油口			尺寸 (mm)					
			A1	B1	ØC1	D1	T1 口螺纹	
							公制	UNC
T67DBB T67DCB	P1	1 ¼”	30.2	58.7	31.8	82.6	M12 x 22.3	$^{7}/_{16}$”-14UNC x 22.3
	P2	1”	26.2	52.4	25.0	101.6	M10 x 19.0	$^{3}/_{8}$”-16UNC x 19.0
	P3	¾”	22.2	47.7	19.0	74.7	M10 x 19.0	$^{3}/_{8}$”-16UNC x 19.0
	S	4”	77.8	130.2	101.6	127.0	M16 x 30.0	$^{5}/_{8}$”-11UNC x 30.0
T6DCC	P1	1 ¼”	30.2	58.7	31.8	82.6	M12 x 22.3	$^{7}/_{16}$” - 14UNC x 22.3
	P2	1”	26.2	52.4	25.0	101.6	M10 x 19.0	$^{3}/_{8}$”-16UNC x 19.0
	P3	M1-01 : ¾” M0-00 : 1”	22.2 26.2	47.7 52.4	19.0 25.4	74.7	M10 x 19.0	$^{3}/_{8}$”-16UNC x 19.0
	S	4”	77.8	130.2	101.6	127.0	M16 x 30.0	$^{5}/_{8}$”-11UNC x 30.0

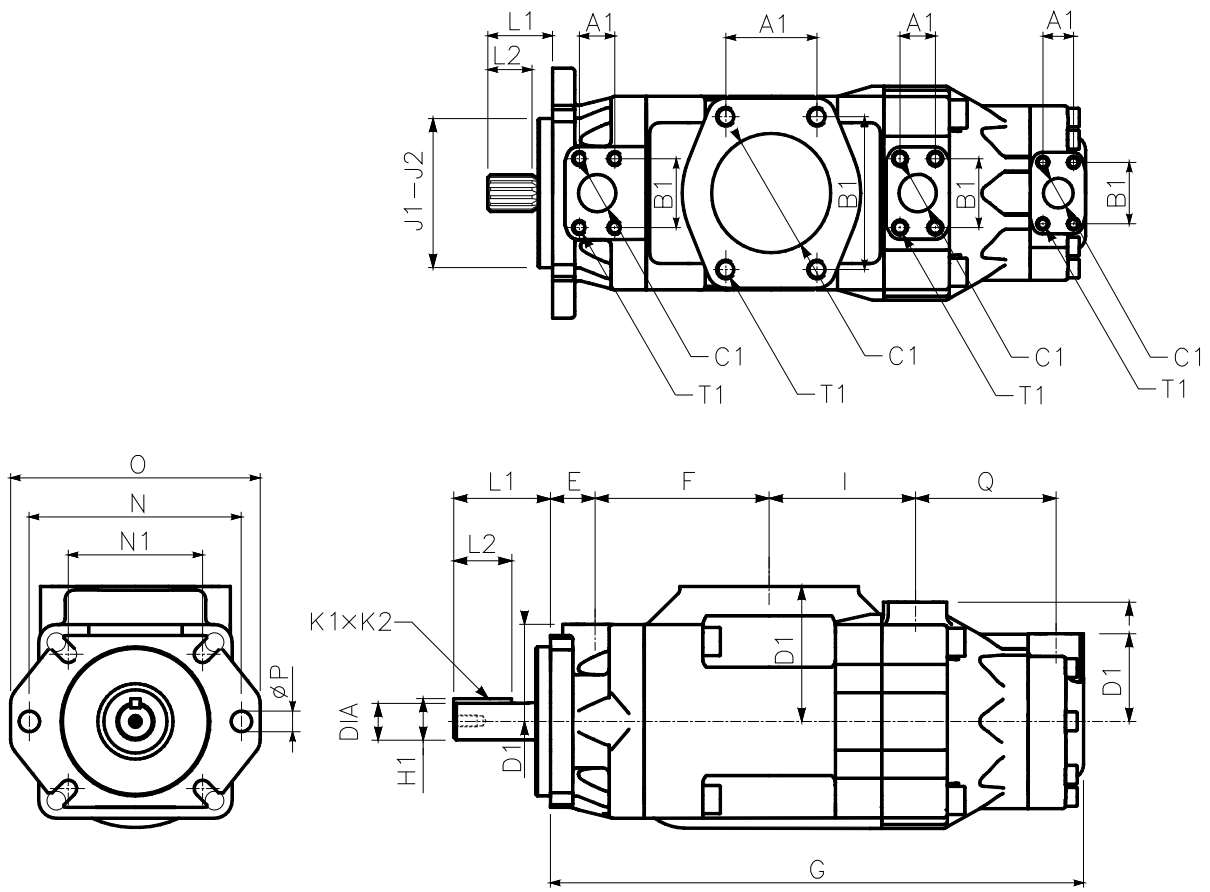

	T67DDBS T6DDCS
E	38.1
F	148.5
G	455.0
I	125.0
J1 J2	127.00 126.95
N	181.0
N1	114.5
O	213.0
ØP	17.5
Q	120.0

軸伸		最大扭矩 (N.m)	尺寸 (mm)					
		T67DDBS / T6DDCS	L1	L2	直径	K1 x K2	H1	M1
1	平键 : SAE-C	686	84.0	49.3	31.750 - 31.700	7.94 x 7.89	35.27	M10 x 20
2	平键 : SAE-CC	1148	91.0	50.8	38.100 - 38.050	9.52 x 9.47	42.36	M10 x 20
5	平键 : non SAE	883	84.0	60.0	34.900 - 34.850	7.94 x 7.89	38.42	M10 x 20
3	花键 : SAE-C	971	56.0	38.0	Class 1-J498b, 12/24 d.p. - 14 牙			
4	花键 : SAE CC	●	46.0	31.5	Class 1-J498b, 12/24 d.p. - 17 牙			

油口			尺寸 (mm)					
			A1	B1	ØC1	D1	T1 口螺纹	
							公制	UNC
T67DDBS	P1	1 ¼”	30.2	58.7	31.8	82.6	M12 x 22.3	7/16” - 14UNC x 22.3
	P2	1 ¼”	30.2	58.7	31.8	101.6	M12 x 24.0	7/16” - 14UNC x 24.0
	P3	M1-01 : ¾”	22.2	47.7	19.0	74.7	M10 x 19.0	3/8” - 16UNC x 19.0
	S	4”	77.8	130.2	101.6	115.0	M16 x 30.0	5/8” - 11UNC x 30.0
T6DDCS	P1	1 ¼”	30.2	58.7	31.8	82.6	M12 x 22.3	7/16” - 14UNC x 22.3
	P2	1 ¼”	30.2	58.7	31.8	101.6	M12 x 24.0	7/16” - 14UNC x 24.0
	P3	M1-01 : ¾” M0-00 : 1”	22.2 26.2	47.7 52.4	19.0 25.4	74.7	M10 x 19.0	3/8” - 16UNC x 19.0
	S	4”	77.8	130.2	101.6	115.0	M16 x 30.0	5/8” - 11UNC x 30.0

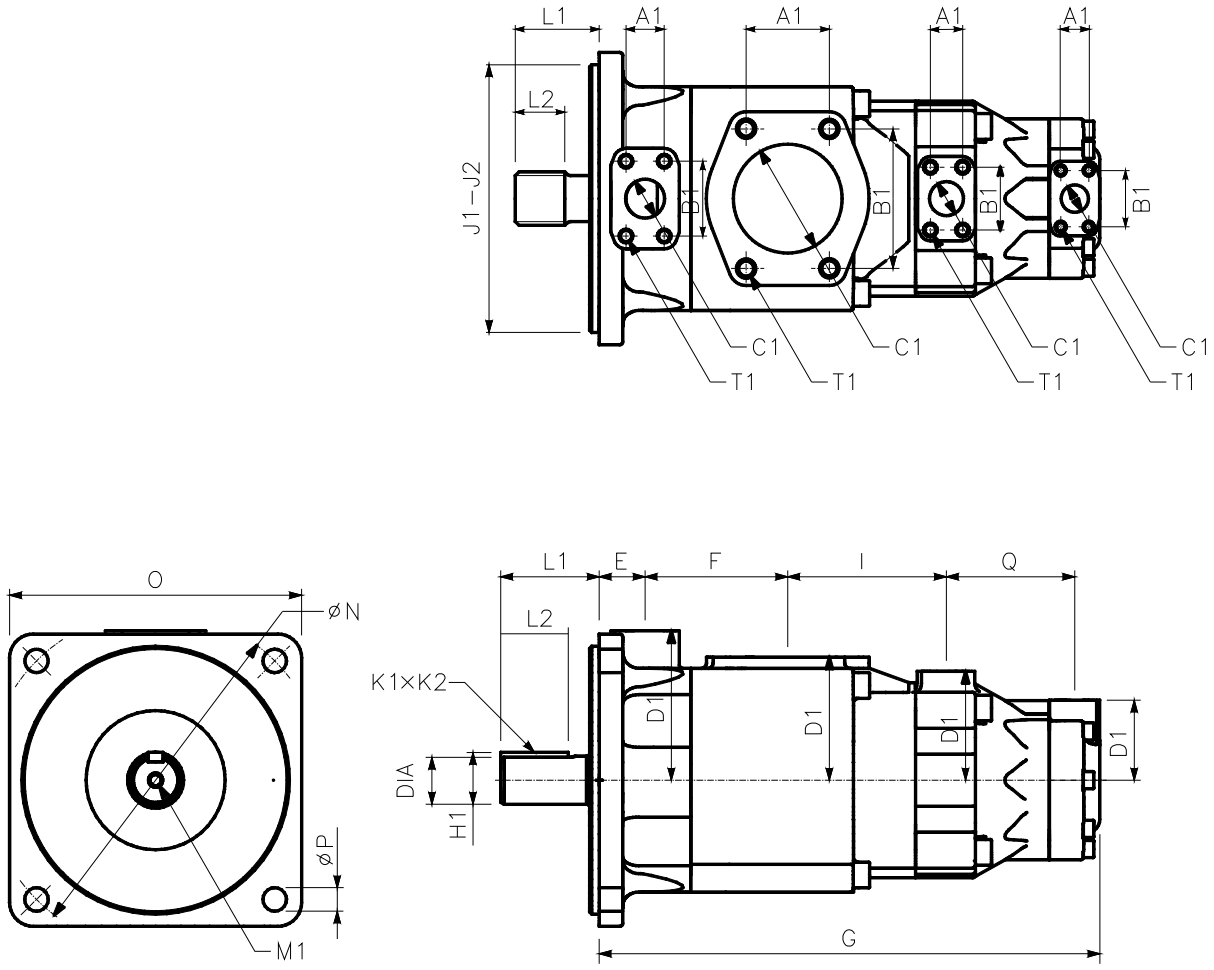

	T67EDB
E	42.9
F	133.3
G	468.0
I	148.4
J1 J2	165.05 165.10
ØN	315.0
O	273.0
ØP	22.0
Q	120.0
	T6EDC
E	42.9
F	133.3
G	468.0
I	148.4
J1 J2	250h8
ØN	315.0
O	273.0
ØP	22.0
Q	120.0
	T6EDCS
E	42.9
F	133.3
G	468.0
I	148.4
J1 J2	165.05 165.10
ØN	315.0
O	273.0
ØP	22.0
Q	120.0

軸伸		扭矩 (N.m)		尺寸 (mm)					
		T67EDB T6EDC	T6EDCS	L1	L2	直径	K1 x K2	H1	M1
1	平键 : ISO3019 (∅45)	●	●	92.0	63.0	45h7	14h8	48.5	M12 x 24.0
2	平键 : SAE- D		●	100.0	63.5	44.450 - 44.400	11.11 x 11.06	49.3	½"UNCx24.0
3	花键: SAE D & E		●	75.0	48.8	Class 1-J498b, 8/16 d.p. - 13 牙			

油口			尺寸 (mm)					
			A1	B1	ØC1	D1	T1 口螺纹	
							公制	UNC
T6EDC T6EDCS	P1	1 ½"	35.7	69.8	37.1	139.7	T6EDC : M12 x 30.0	T6EDCS : ½"-13UNC x 30.0
	P2	1 ¼"	30.2	58.7	31.8	101.6	T6EDC : M12 x 24.0	T6EDCS : $^{7}/_{16}$"-14UNC x 24.0
	P3	F1-P1 : ¾" F0-P0 : 1"	22.2 26.2	47.7 52.4	19.0 25.4	74.7	T6EDC : M10 x 19.0	T6EDCS : $^{3}/_{8}$"-16UNC x 19.0
	S	4"	77.8	130.2	101.6	115.0	T6EDC : M16 x 30.0	T6EDCS : $^{5}/_{8}$"-11UNC x 30.0